mail@thewaymembranes.com
www.thewaymembranes.com
Chennai, India

Surge TW-MBR-28S

Submerged hollow fibre MBR module · Datasheet

Submerged hollow fibre MBR module. Theway builds it to the published dimensions and connections of the equipment named under "Theway equivalent of", so it fits the installed system with no change to the tank, frame or piping. Main figures: membrane area 27.9 m² (300 ft²); dimensions 1,835 × 844 × 49 mm; fibre reinforced PVDF, 0.04 µm, outside-in.



3D render

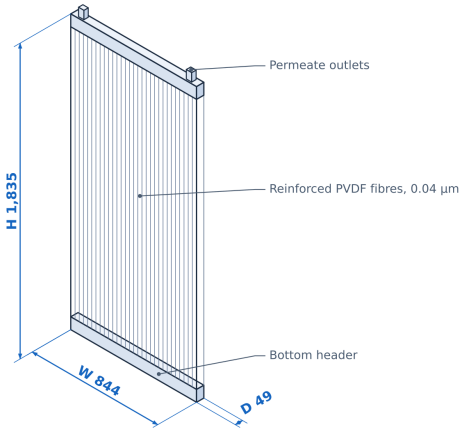

Dimensions in mm. Drawing not to scale.

Module

Type	Submerged hollow fibre, outside-in
Membrane area	27.9 m² (300 ft²)
Dimensions (H × W × D)	1,835 × 844 × 49 mm
Open fibre length	1,577 mm
Fibre	Reinforced PVDF, OD 2.0 mm, ID 0.9 mm
Nominal pore size	0.04 µm
Headers and potting	ABS headers, epoxy potting
Fits	16Ms cassettes (363 mm lower than 16M)

Operating limits *

Transmembrane pressure	−55 to +55 kPa (wastewater, MBR)
Operating pH	5.0 to 9.5
Cleaning pH	2.0 to 10.5
Maximum temperature	40 °C, operating and cleaning
Chlorine in cleaning	Maximum 1,000 ppm
Filtration cycle	7 to 12 min, relaxation 45 to 120 s, backwash 30 to 60 s
Air scouring	0.3 to 0.5 m³/h per m²

* Limits of the equipment this product is built to fit. A project design may set more conservative values.

Theway equivalent of

Veolia ZeeWeed 500D module, 300 ft² (27.9 m²)	1,835 × 844 × 49 mm; 16Ms cassettes (363 mm lower than 16M)

Brand and model names belong to their owners and are used only to identify the equipment this product is built to fit. Theway Membranes is not connected with those owners. Check dimensions, connections and operating conditions against the installed equipment before replacing it.

Operating guidelines

- Screen the feed ahead of the membrane tank as for the original installation; hair and fibres shorten membrane life.
- Run air scouring whenever the membranes filter. Stop filtration if the air supply fails.
- Keep transmembrane pressure within the stated limit. A rising TMP calls for cleaning, not for more suction.
- Clean in place with sodium hypochlorite (organic) and citric or oxalic acid (inorganic), within the stated pH, temperature and chlorine limits.
- Keep modules wet once wetted, unless the sheet says they are supplied and stored dry.

General notes

- Before the first order, one installed module is checked against this sheet: header fixing, nozzle or spigot, and edge profile.
- Supplied wet in preservative, crated; store above 5 °C and out of direct sun.
- Theway standard limited warranty applies within the stated limits. Operation outside them voids the warranty.

© 2026 Theway Membranes · Document TWM-DS-SURGE-TW-MBR-28S · Version 1.0 · Released November 2026

mail@thewaymembranes.com
www.thewaymembranes.com
Chennai, India

Surge TW-MBR-28S

Legal notice

Guidance only. Values are typical and indicative, given in good faith under the stated reference conditions. They are not guaranteed values and not a warranty of performance; actual performance depends on feed water, pretreatment, design, operation and maintenance.

Binding terms. The only binding specification is Theway's written quotation and order acknowledgement. Supply is under Theway's Terms of Sale, which set out the warranty and limit Theway's liability. Except as stated there, Theway gives no warranty, express or implied, including merchantability or fitness for a particular purpose.

No liability for reliance. To the fullest extent permitted by law, Theway accepts no liability for any loss, damage, injury or cost arising from use of or reliance on this datasheet, or from misuse, incorrect installation, modification or use outside the stated limits, and no liability for indirect, incidental, special or consequential loss.

Your responsibility. The user must confirm that the product is suitable and safe for the intended use, including chemical compatibility, potable-water or food-contact requirements and local regulations, and must have it installed and operated by competent persons.

Equivalents and trade marks. "Equivalent" means built by Theway to fit and operate in place of the named equipment, by its published dimensions, connections and ratings. The product is not made, approved or endorsed by the owner of the named equipment, and Theway is not connected with that owner. Fitting it may affect a warranty or service agreement with the original supplier; check before replacing. Brand and model names belong to their owners and are used only for identification.

Changes and versions. Theway may change designs and specifications without notice. This version supersedes all earlier versions; ask for the current version before ordering.

Ownership. © 2026 Theway Membranes. All rights reserved. This datasheet, its drawings and renderings are Theway's property and are for illustration; supplied products may differ in finish and labelling. They may not be copied, altered, published or passed to third parties without Theway's written permission, except to evaluate Theway products.

Law. Governing law and jurisdiction are as stated in the Terms of Sale. Full terms: www.thewaymembranes.com/post/terms-of-sale and /post/product-and-datasheet-disclaimer.