mail@thewaymembranes.com
www.thewaymembranes.com
Chennai, India

TW-CAS-16

MBR cassette frames for up to 16 modules · Datasheet

MBR cassette frames for up to 16 modules. Theway builds it to the published dimensions and connections of the equipment named under "Theway equivalent of", so it fits the installed system with no change to the tank, frame or piping. Main figures: TW-CAS-16 1,744 × 738 × 2,504 mm; TW-CAS-16S 1,744 × 738 × 2,141 mm; modules up to 16.



3D render

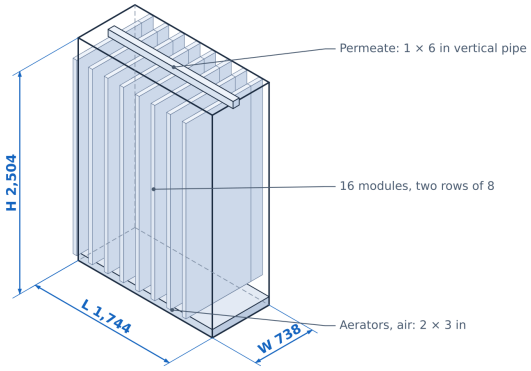

Dimensions in mm. Drawing not to scale.

Frames

TW-CAS-16 (L × W × H)	1,744 × 738 × 2,504 mm
TW-CAS-16S (L × W × H)	1,744 × 738 × 2,141 mm
Modules	Up to 16, one row
Modules to fit, 16	Surge TW-MBR-40, -34, -30 or original 500D
Modules to fit, 16S	Surge TW-MBR-28S or original 500D short module
Material	SS304, SS316L or duplex 2205, welded

Connections

Permeate and air	To the original 16M pattern, taken from the plant's cassette

Theway equivalent of

ZeeWeed 500D 16M cassette	1,744 × 738 × 2,504 mm
ZeeWeed 500D 16Ms cassette	1,744 × 738 × 2,141 mm

Brand and model names belong to their owners and are used only to identify the equipment this product is built to fit. Theway Membranes is not connected with those owners. Check dimensions, connections and operating conditions against the installed equipment before replacing it.

Operating guidelines

- Lift only by the lifting points, with the frame level.
- Check that every module seats on its permeate connection before installation.
- Keep air on whenever the modules filter.

General notes

- Permeate and air connection positions are taken from the plant's cassette before the first frame is built.
- Same welding jigs as TW-CAS-48.
- Theway standard limited warranty applies within the stated limits. Operation outside them voids the warranty.

© 2026 Theway Membranes · Document TWM-DS-TW-CAS-16 · Version 1.0 · Released November 2026

Legal notice

Guidance only. Values are typical and indicative, given in good faith under the stated reference conditions. They are not guaranteed values and not a warranty of performance; actual performance depends on feed water, pretreatment, design, operation and maintenance.

Binding terms. The only binding specification is Theway's written quotation and order acknowledgement. Supply is under Theway's Terms of Sale, which set out the warranty and limit Theway's liability. Except as stated there, Theway gives no warranty, express or implied, including merchantability or fitness for a particular purpose.

No liability for reliance. To the fullest extent permitted by law, Theway accepts no liability for any loss, damage, injury or cost arising from use of or reliance on this datasheet, or from misuse, incorrect installation, modification or use outside the stated limits, and no liability for indirect, incidental, special or consequential loss.

Your responsibility. The user must confirm that the product is suitable and safe for the intended use, including chemical compatibility, potable-water or food-contact requirements and local regulations, and must have it installed and operated by competent persons.

Equivalents and trade marks. "Equivalent" means built by Theway to fit and operate in place of the named equipment, by its published dimensions, connections and ratings. The product is not made, approved or endorsed by the owner of the named equipment, and Theway is not connected with that owner. Fitting it may affect a warranty or service agreement with the original supplier; check before replacing. Brand and model names belong to their owners and are used only for identification.

Changes and versions. Theway may change designs and specifications without notice. This version supersedes all earlier versions; ask for the current version before ordering.

Ownership. © 2026 Theway Membranes. All rights reserved. This datasheet, its drawings and renderings are Theway's property and are for illustration; supplied products may differ in finish and labelling. They may not be copied, altered, published or passed to third parties without Theway's written permission, except to evaluate Theway products.

Law. Governing law and jurisdiction are as stated in the Terms of Sale. Full terms: www.thewaymembranes.com/post/terms-of-sale and /post/product-and-datasheet-disclaimer.