mail@thewaymembranes.com
www.thewaymembranes.com
Chennai, India

TW-0.7-FS

Thin flat-sheet MBR element and cassette · Datasheet

Thin flat-sheet MBR element and cassette. Theway builds it to the published dimensions and connections of the equipment named under "Theway equivalent of", so it fits the installed system with no change to the tank, frame or piping. Main figures: element 480 × 800 × 1.8 mm, 0.7 m²; cassette 485 × 440 × 820 mm, 35 m²; membrane PVDF, 0.08 µm.



3D render

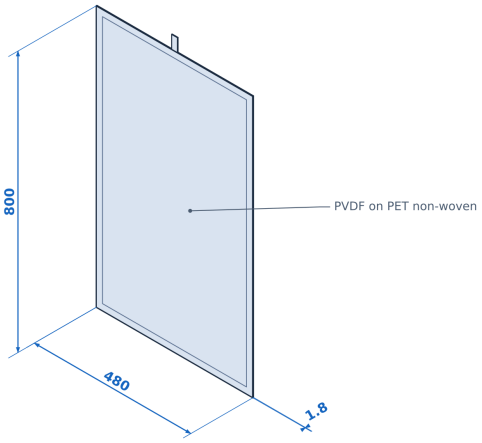

Dimensions in mm. Drawing not to scale.

Element and cassette

Element	480 × 800 × 1.8 mm, 0.7 m²
Membrane	PVDF on PET non-woven, 0.08 µm
Nozzle	PE
Element weight, dry / wet	0.25 / 0.5 kg
Cassette (50 elements)	485 × 440 × 820 mm, 35 m², 17 kg dry
Frame	304 stainless steel (316 optional)
Manifold and diffuser	1½ in ANSI flange

Operating limits *

Temperature	5 to 40 °C
pH	5 to 10
MLSS	Not higher than 18,000 mg/L
TMP	Not higher than 20 kPa
Cleaning feed pressure	Not higher than 10 kPa
Cleaning	NaOCl 2,000 to 6,000 mg/L; oxalic 0.5 to 1 % or citric 1 to 3 %

* Limits of the equipment this product is built to fit. A project design may set more conservative values.

NHP210 modules

Module	Elements	Cassettes × decks	m²	W × L × H mm	Dry kg
NHP210-300S	300	3 × 2	210	770 × 1,635 × 2,175	235
NHP210-600D	600	3 × 4	420	770 × 1,635 × 3,845	430

Theway equivalent of

Toray NHP210, element TSP-50080	Cassette ECS035; modules NHP210-300S and -600D

Brand and model names belong to their owners and are used only to identify the equipment this product is built to fit. Theway Membranes is not connected with those owners. Check dimensions, connections and operating conditions against the installed equipment before replacing it.

© 2026 Theway Membranes · Document TWM-DS-TW-0-7-FS · Version 1.0 · Released November 2026

mail@thewaymembranes.com
www.thewaymembranes.com
Chennai, India

Operating guidelines

• Screen the feed ahead of the membrane tank as for the original installation; hair and fibres shorten membrane life.

• Run air scouring whenever the membranes filter. Stop filtration if the air supply fails.

• Keep transmembrane pressure within the stated limit. A rising TMP calls for cleaning, not for more suction.

• Clean in place with sodium hypochlorite (organic) and citric or oxalic acid (inorganic), within the stated pH, temperature and chlorine limits.

• Keep modules wet once wetted, unless the sheet says they are supplied and stored dry.

General notes

• Before the first order, one installed module is checked against this sheet: header fixing, nozzle or spigot, and edge profile.

• Supplied clean and dry.

• Theway standard limited warranty applies within the stated limits. Operation outside them voids the warranty.

Legal notice

Guidance only. Values are typical and indicative, given in good faith under the stated reference conditions. They are not guaranteed values and not a warranty of performance; actual performance depends on feed water, pretreatment, design, operation and maintenance.

Binding terms. The only binding specification is Theway's written quotation and order acknowledgement. Supply is under Theway's Terms of Sale, which set out the warranty and limit Theway's liability. Except as stated there, Theway gives no warranty, express or implied, including merchantability or fitness for a particular purpose.

No liability for reliance. To the fullest extent permitted by law, Theway accepts no liability for any loss, damage, injury or cost arising from use of or reliance on this datasheet, or from misuse, incorrect installation, modification or use outside the stated limits, and no liability for indirect, incidental, special or consequential loss.

Your responsibility. The user must confirm that the product is suitable and safe for the intended use, including chemical compatibility, potable-water or food-contact requirements and local regulations, and must have it installed and operated by competent persons.

Equivalents and trade marks. "Equivalent" means built by Theway to fit and operate in place of the named equipment, by its published dimensions, connections and ratings. The product is not made, approved or endorsed by the owner of the named equipment, and Theway is not connected with that owner. Fitting it may affect a warranty or service agreement with the original supplier; check before replacing. Brand and model names belong to their owners and are used only for identification.

Changes and versions. Theway may change designs and specifications without notice. This version supersedes all earlier versions; ask for the current version before ordering.

Ownership. © 2026 Theway Membranes. All rights reserved. This datasheet, its drawings and renderings are Theway's property and are for illustration; supplied products may differ in finish and labelling. They may not be copied, altered, published or passed to third parties without Theway's written permission, except to evaluate Theway products.

Law. Governing law and jurisdiction are as stated in the Terms of Sale. Full terms: www.thewaymembranes.com/post/terms-of-sale and /post/product-and-datasheet-disclaimer.